Institute for Electrical Energy Storage Technology
Department of Electrical and Computer Engineering
Technical University of Munich

Advanced Battery Aging Analyses based on High Precision Coulometry

Peter Keil, Jörn Wilhelm, Andreas Jossen

Advanced Automotive Battery Conference Europe

Mainz, February 1st, 2018

Challenges in Lithium-Ion Battery Technology

Improving Battery Performance

- High-energy batteries with long battery life
- Fast-charging capabilities
- Better low-temperature operation

Modern batteries require modern testing methods!

- Faster battery life assessments
- Identification of smallest aging quantities
- Separation of side reactions

High Precision Coulometry

Introduction: Coulometrie

Typical Test Procedure

Charge-discharge cycles, usually performed with low currents

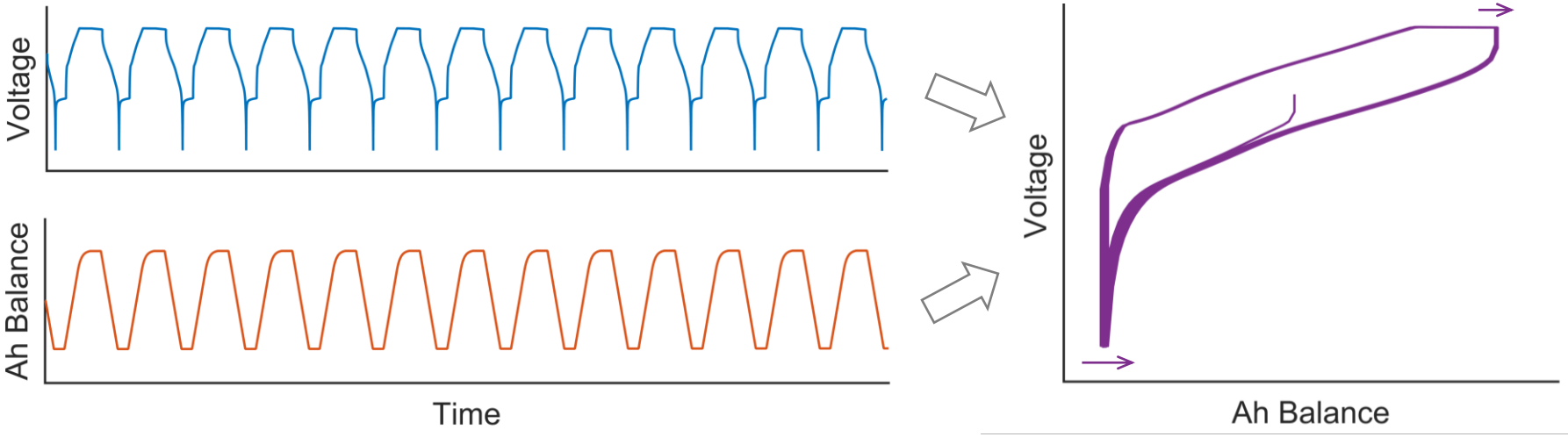

Degradation Indicators

- Coulombic Efficiency (ampere-hour efficiency) per cylce
- Slippage of charging end point & discharging end point

Coulombic Efficiency (Ampere-Hour Efficiency)

Efficiency values per cycle

- Coulombic Efficiency $CE = Ah_{\text{discharge}} / Ah_{charge}$
- Coulombic Inefficiency $CIE = 1 - CE = 1 - Ah_{\text{discharge}} / Ah_{\text{charge}}$

Application: Cycle life evaluations (relative comparisons)

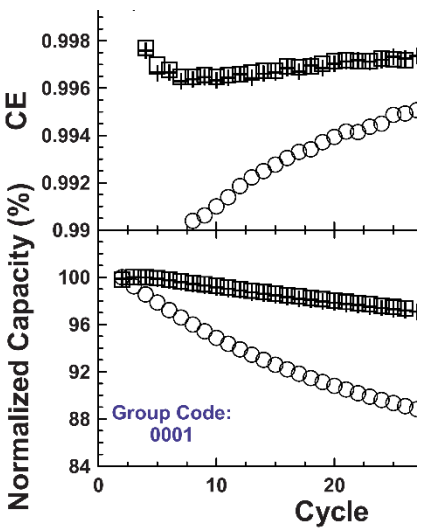

[1]

Comparison of electrolyte additives

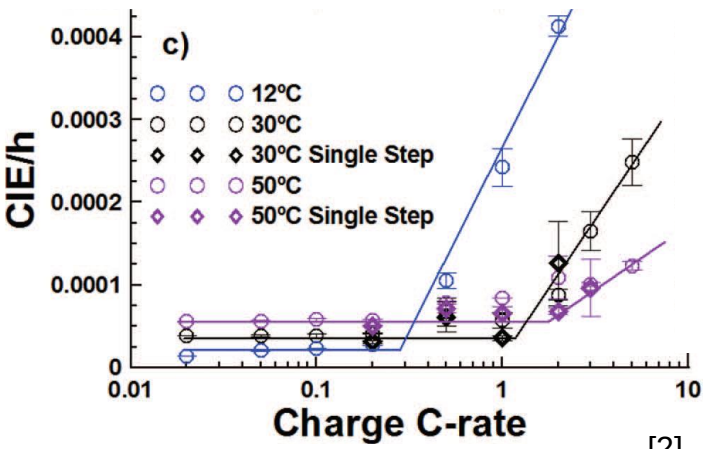

[2]

Identification of lithium plating

[1] A.J. Smith et al., *Journal of The Electrochemical Society*, 158 (10), A1136 (2011).
[2] J.C. Burns et al., *Journal of The Electrochemical Society,* 162 (6), A959 (2015).

Endpoint Slippage

Slippages of charging end point & discharging end point

Evaluation of recurring reference points

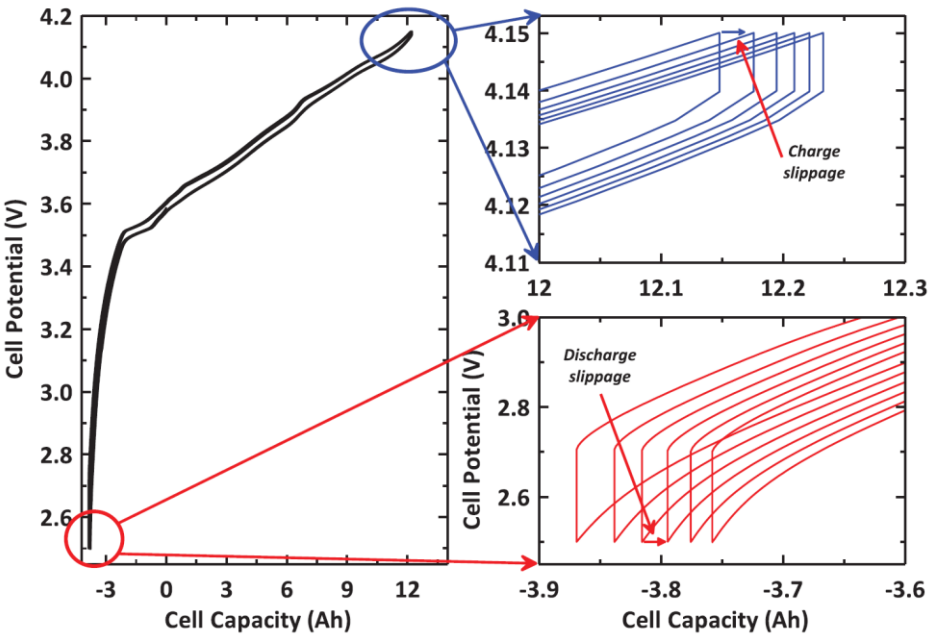

[3]

Application: Identification of side reactions at the anode and at the cathode

[3] D.A. Stevens et al., *Journal of The Electrochemical Society*, 161 (9), A1364 (2014).

End point conditions

Cell voltage reconstruction based on anode and cathode half-cell potential

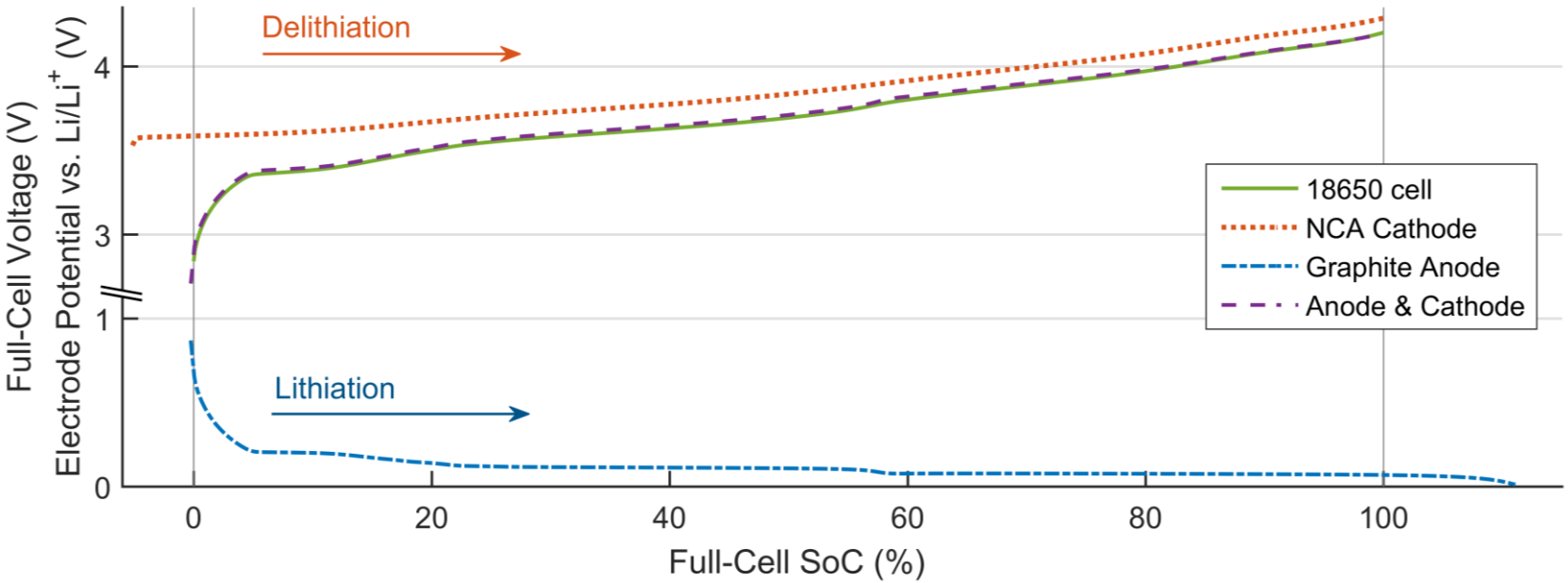

- Charging end point: dominated by voltage increase of delithiated anode
- Discharging end point: dominated by voltage increase of delithiated cathode

[4] P. Keil, et al., *Journal of The Electrochemical Society*, 163 (9), A1872 (2016).

Identification of Side Reactions

Evaluation of end point slippages

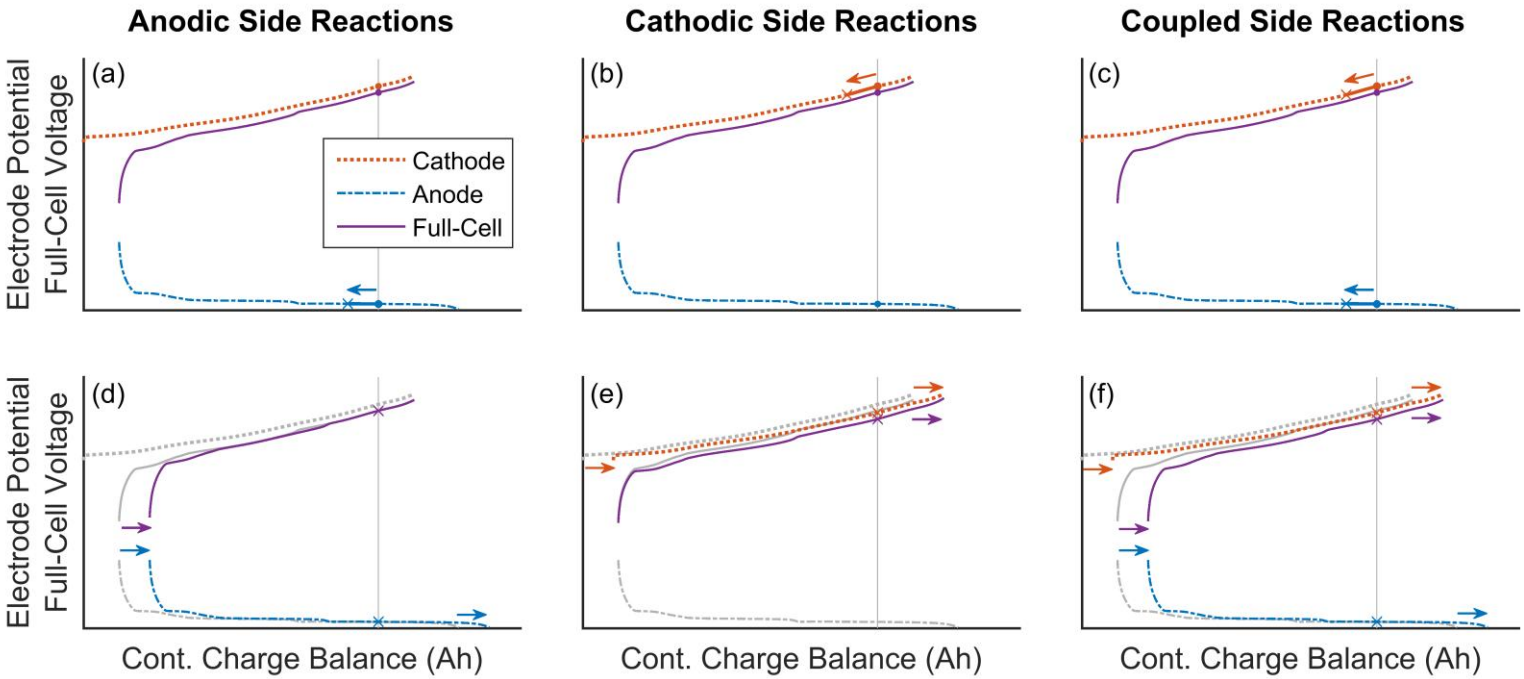

solely anodic side reactions => capacity fade

solely cathodic side reactions => reversible self-discharge + capacity increase

[5] P. Keil, A. Jossen, *Journal of The Electrochemical Society*, 164 (1), A6066 (2017).

Performing Coulometry Studies

Challenge: Ampere-hour drift in long-term measurements
=> high-precision current measurements required, no offset error

Approach: External current measurement unit in addition to standard battery cycler

Accuracy: Measurement error in *CE* measurements: better than ±0.01 %

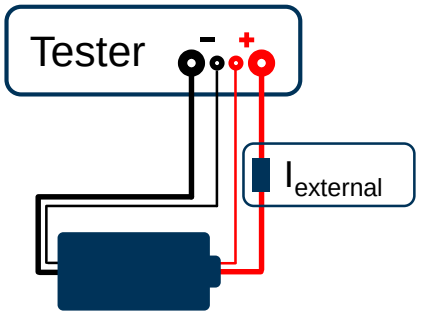

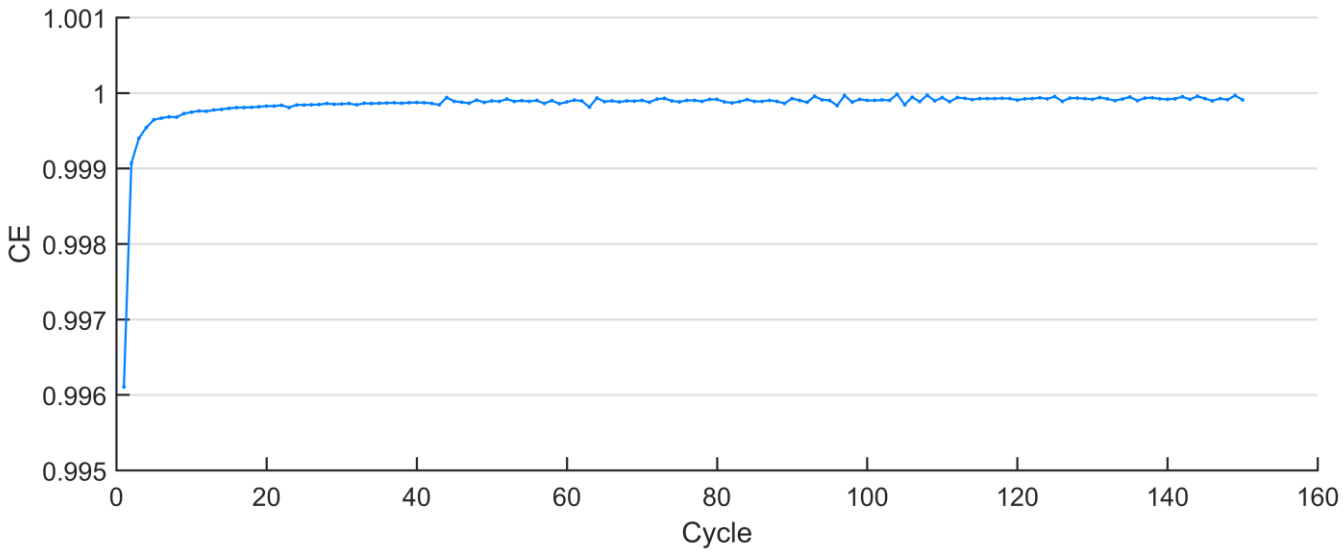

Calendar Aging Investigations

NCA, 2.8 Ah

Charging sequence of periodically performed checkup procedure

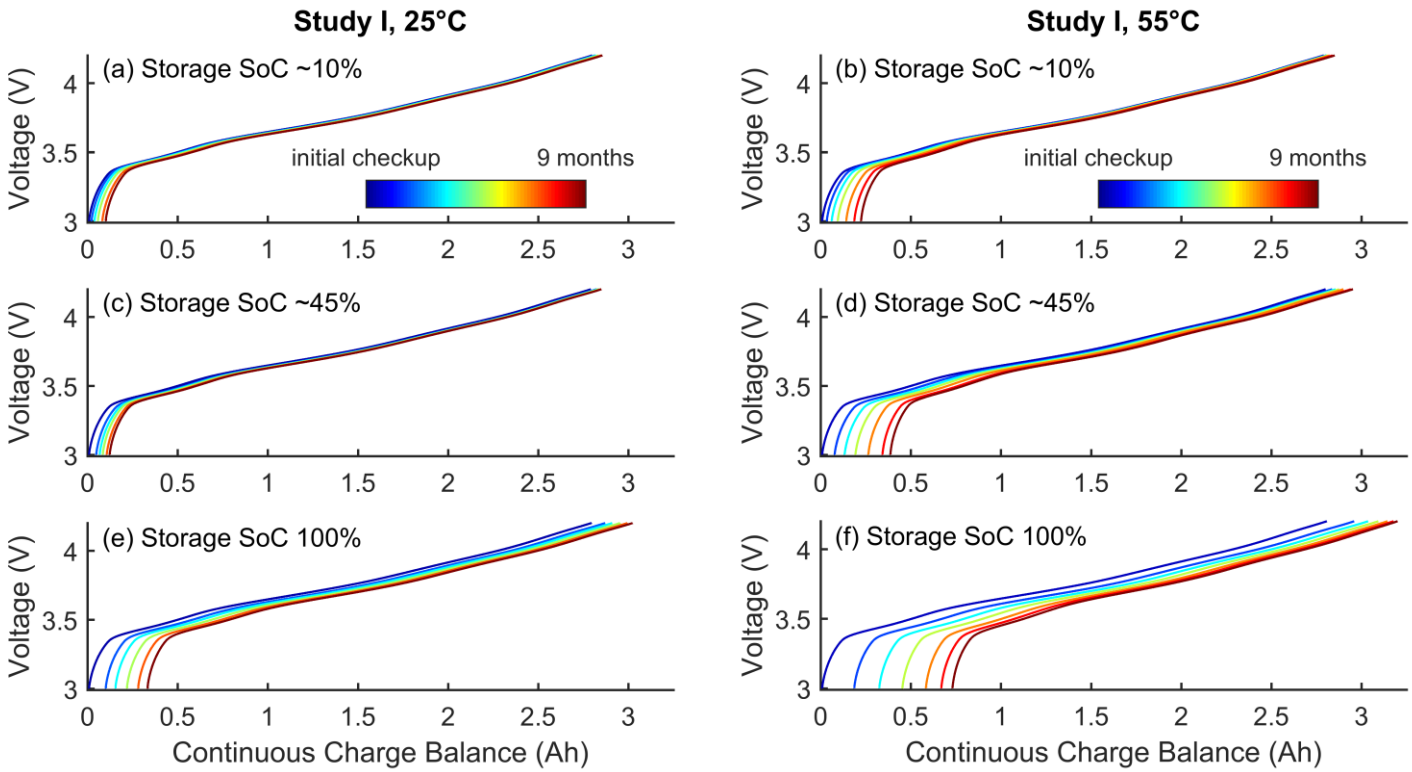

at low SoCs: predominantly anodic side reactions, as charging end point remains unchanged

[5] P. Keil, A. Jossen, *Journal of The Electrochemical Society*, 164 (1), A6066 (2017).

Cycling after Long-Term Storage

LFP, 1.1 Ah

Capacity recovery effects owing to anode overhang areas

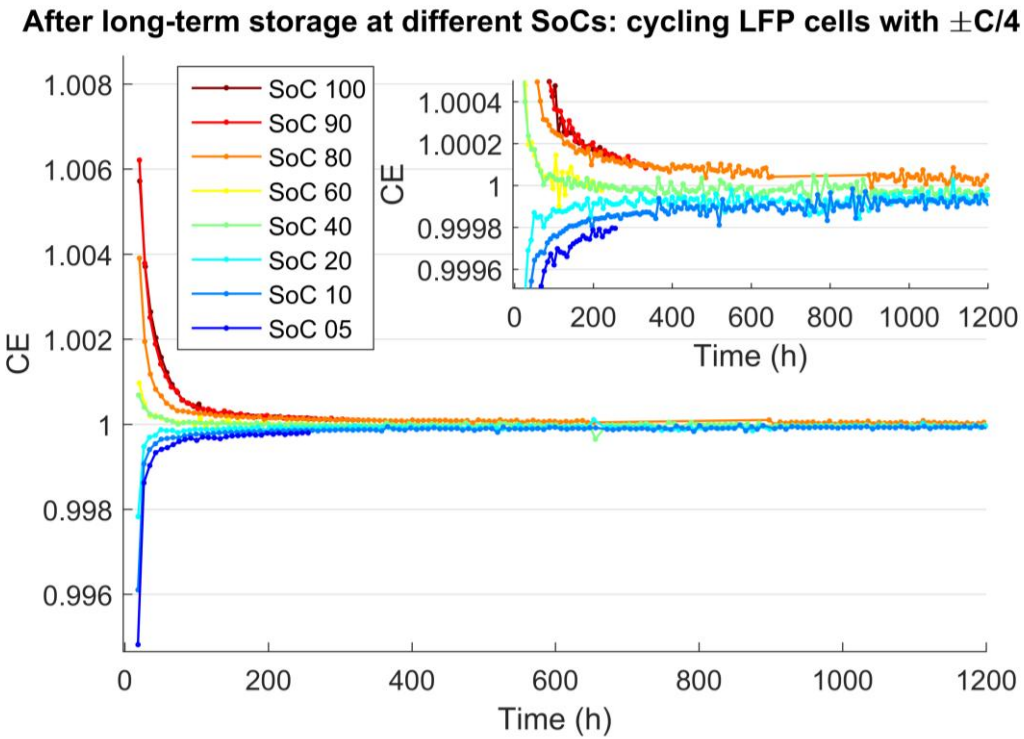

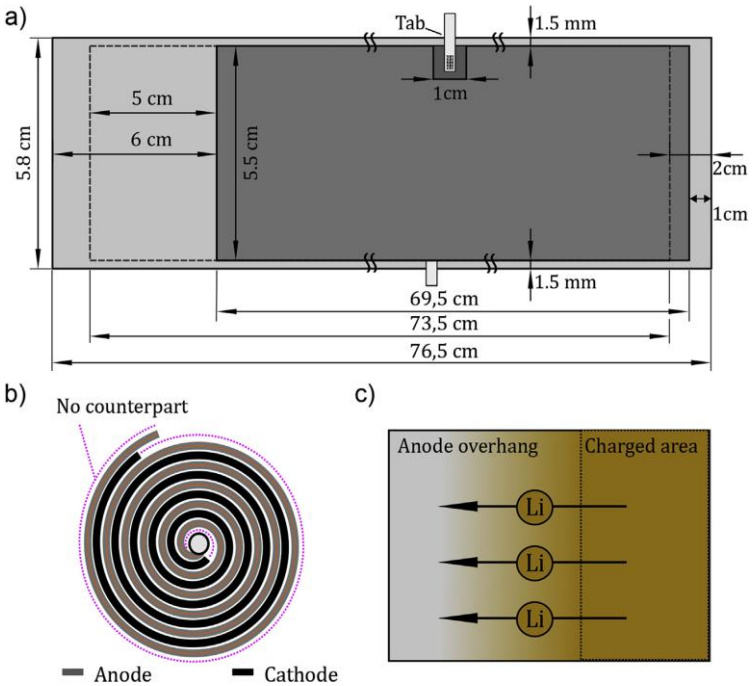

Local potential gradients between overhang areas and active electrode areas make the overhang areas act as a source or sink for cyclable lithium, depending on the cell's history

[6] J. Wilhelm et al., *Journal of Power Sources*, 365, 327-338 (2017).

Charging Protocols

NCA, 3.4 Ah

Comparison between CCCV and Boost Charging protocols

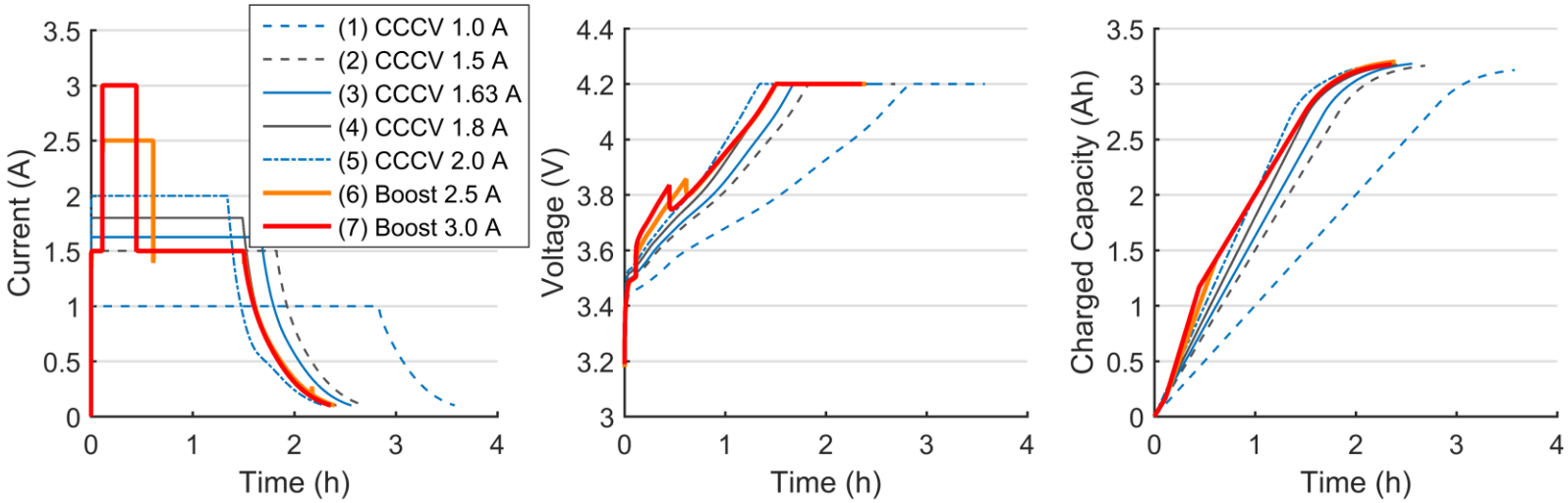

Boost Charging protocols (#6, #7) were designed to have a similar charging duration as CCCV charging with 1.8 A (#4) but staying below 1.625 A ($I_{\text{recommended by manufacturer}}$) at high SoC

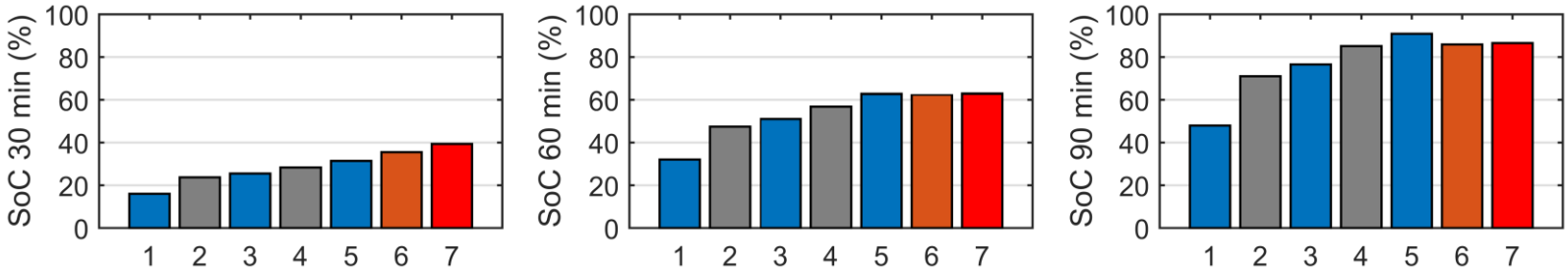

Charging Protocols

NCA, 3.4 Ah

High Precision Coulometry enables quick qualitative comparisons

Degradation after 50 cycles

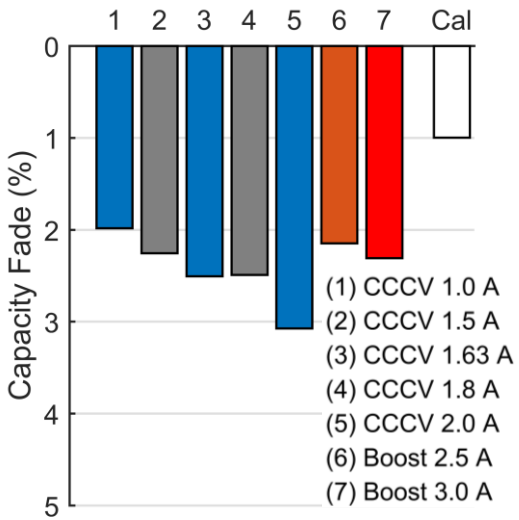

Coulombic Efficiency Evolution

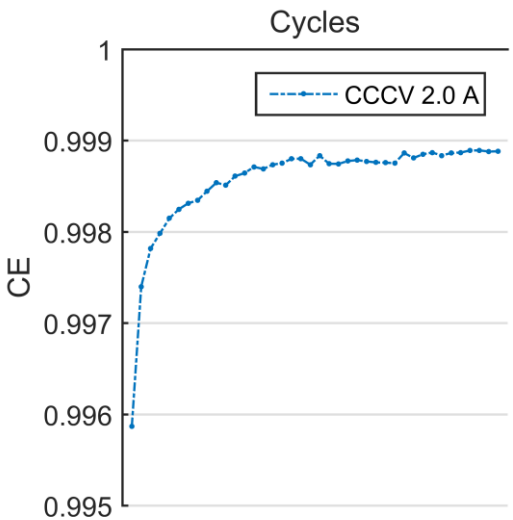

"Stable" Coulombic Inefficiency

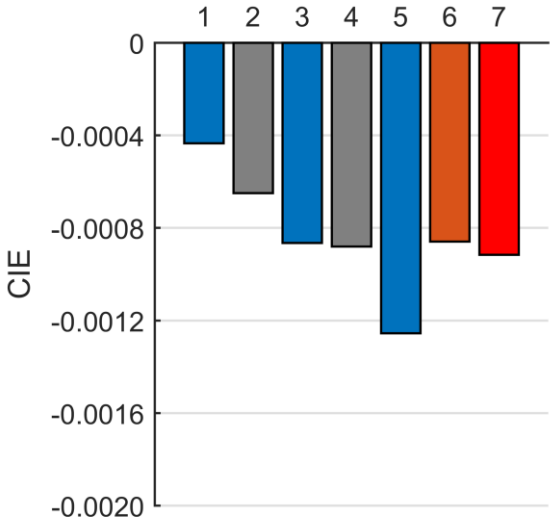

Coulombic Efficiency graphs exhibit asymptotic behavior

- at the beginning: aging + impact of lithium moving into anode overhang areas
- later: loss of cyclable lithium owing to aging reactions (e.g., lithium plating)

Aging Diagnostics by Coulometry

Advantages:

- ✚ Precise detection of battery degradation
- ✚ Rapid qualitative comparisons already after few cycles
- ✚ Identification of anodic and cathodic side reactions

High Precision Coulometry brings battery aging studies to a higher level

- ✚ Accelerates aging studies and improves quality of results

Further Investigations

New battery aging studies with dynamic load profiles

=> Identifying mechanisms behind battery degradation caused by high discharging currents at low temperature

Further Information & Outlook

This presentation + more Information about Coulometry

www.peterkeil.de/aabc2018

Contact mail@peterkeil.de

Start-up: New HPC devices for better battery testing

Add-on measurement devices

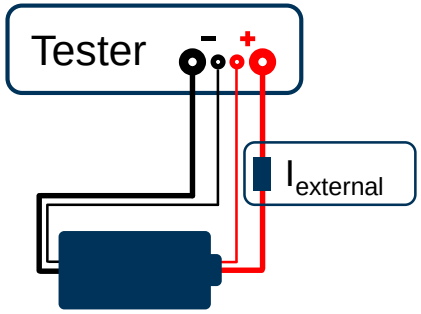

Standalone HPC Testers for high dynamics, e.g., driving cycles

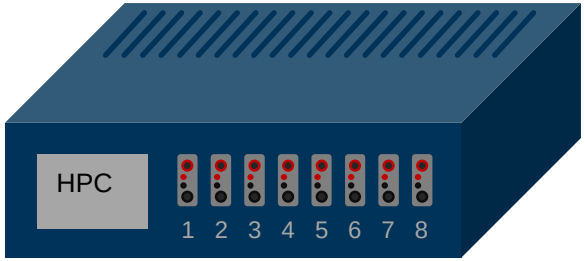

References

[1] A.J. Smith et al., *Journal of The Electrochemical Society*, 158 (10), A1136-A1142 (2011).
[2] J.C. Burns et al., *Journal of the Electrochemical Society,* 162 (6), A959-A964 (2015).
[3] D.A. Stevens et al., *Journal of The Electrochemical Society*, 161 (9), A1364-A1370 (2014).
[4] P. Keil et al., *Journal of The Electrochemical Society*, 163 (9), A1872-A1880 (2016).
[5] P. Keil, A. Jossen, *Journal of The Electrochemical Society*, 164 (1), A6066-A6074 (2017).
[6] J. Wilhelm et al., *Journal of Power Sources*, 365, 327-338 (2017).